IJCTA, 9(28), 2016, pp. 1-9
© International Science Press

RADAR and its Applications

Niraj Prasad Bhatta* and M. GeethaPriya**

Abstract : RADAR is an electromagnetic system for the detection and location of target objects such as aircraft, ships, spacecraft, vehicles, people, and the natural environment which can reflect a signal back. It uses electromagnetic radio waves to determine the angle, range, or velocity of objects. RADAR was developed by various nations before and during Second World War. RADAR is a classic example of an electronic engineering system that utilizes many of the specialized elements of technology practiced by electrical engineers, including signal processing, data processing, waveform design, electromagnetic scattering, detection, parameter estimation, information extraction, antennas, propagation transmitters, and receivers. This paper gives an outline of RADAR principle and some of the RADAR applications, which range from air traffic control, forest and climate monitoring and the monitoring of natural disasters, to name just a few.
Keywords : RADAR, applications, electromagnetic,surveillance, synthetic aperture.

1. INTRODUCTION

RADARis an electromagnetic system which is used for sensing, detecting and locating the objects present in the ambience. RADAR stands for Radio Detection and Ranging. For the first time, in the year 1940 US Navy coined the term RADAR. This system operated by transmitting an electromagnetic wave and detecting the reflected signal. Earlier, the RADARwas mainly developed for detecting the existence of a target for measuring its range, so addressed as RADAR. During the Second World War, it was first used to notify the approach of hostile aircraft and for routing antiaircraft weapons. The modern RADAR system can be used to extract much more information from the reflected signal and got broader applications but still the range detection is one of its important functions. Till now, there is no electronic system which can replace the RADAR for its accuracy and efficiency in sensing and detection.

RADAR extends the capability of sense of vision by observing the atmospheric conditions. It can observe the environment conditions that are impervious to the human vision. It can be envisioned as an additional sensory organ to the human eyes that can detect and locate the object beyond the reach of human eyes. Its attribute can be seen in collecting data in rain, snow, darkness, fog, smoke, etc. It is also used to measure the instantaneous velocity of any object approaching or going away from the observer. RADAR radiates either radio waves or microwave signals and receives back the reflected signal. A most common type of waveform radiated by RADAR is the train of narrow, rectangular shaped pulses.

In present days, the high tech RADAR has wider areas of applications, viz. aircraft anti-collision systems, air and terrestrial traffic control, surveillance systems, air-defense systems,meteorological monitoring, antimissile systems, RADAR astronomy, marine RADARs for ships, guided missile target locating system, remote sensing, geological observations, measurement of height and depths etc.

RADARhas become a high-end security system on which surveillance of entire world depends and becoming more and more popular nowadays. Radars have been deployed on ground, on sea,in air, and in

* Department of Electronics & Communication Engineering, Jain University, Bangalore, India, *E-mail: sky4drmzz99@gmail.com*

** Centre for Incubation, Innovation, Research and Consultancy (CIIRC), Jyothy Institute of Technology, Bangalore, India *E-mail: geetha.sri82@gmail.com*

space for detecting and locating objects.In this paper, the authors discuss about the RADAR principles and applications highlighting the importance of RADAR in day to day life. In this paper, section 2 deals with the concept of RADAR principle and its operation, section 3 & 4 gives the basic types and classifications of RADAR followed by RADAR applications in section 5.

2. PRINCIPLE AND OPERATION

The basic principle of on which RADAR operates is similar to that of sound wave reflection. RADAR uses electromagnetic energy pulses for detection and location of the objects. In short, its operation can be summarized as below:

- The RADARtransmitselectromagnetic waves through the antenna in all the directions.
- Reflecting objects (targets) intercept these radiated waves and reflect back in all the directions.
- Some of the reflected signal is received by the receiver in RADAR system.
- The received signal is processed further through digital signal processing and amplification thereby a decision is made at the reception output for determining the presence of reflected signal from the target. If the target is present, its location and other information are obtained.

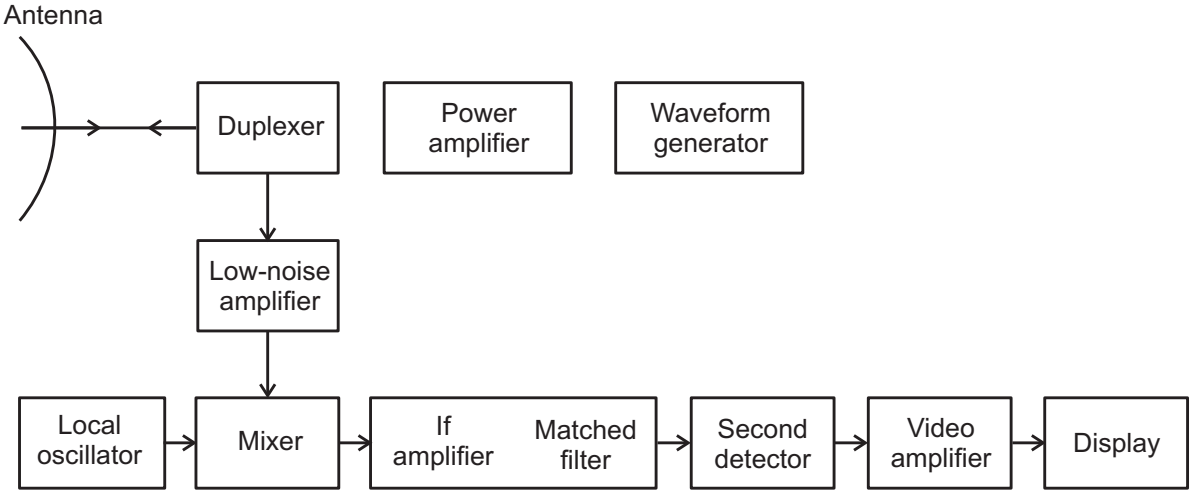

Figure 1: Block Diagram of Elementary RADAR system

The Figure 1 shows the block diagram of a elementary RADAR [1]. The power amplifier is used as a transmitter which produces suitable signal to radiate. It may be an average power or the high power amplifier. Generally, short pulse signal are produced by RADAR. Duplexer allows a single antenna to be used for both transmission and reception of signals. It also protects the receiver from burning out. The antenna acts as a transceiver system. It transmits the electromagnetic radiation in the space and receives back the reflected signal. Mostly directive antennas are used because of its property of collecting a weak echoed signal. Also, it acts as a spatial filter to provide angle resolutions. The receiver of RADAR system is a heterodyne system. It consists of series of steps for signal processing for target detection. The first stage consists of either low noise amplifier or the mixer stage. The receiver input with low noise amplifier is more sensitive to the signal detection. And if mixer stage is deployed as an input, it provides greater dynamic range, less vulnerability to electronic interferences.

The receiver amplifies the reflected signal to a level where it can be easily analyzed. The clutter from the reflected signal (echoes) can be removed by using a receiver input with high dynamic range. The local oscillator and mixer is used to convert the received RF signal to the IF (intermediate frequency) signal. The RADAR used for air-surveillance, the IF amplifier has a center frequency of 30MHz or 60 MHz with a bandwidth of 1MHz. The IF amplifier is designed as a matched filter (*i.e*. the signal-to-noise ratio at output is maximized) for signal processing. It separates the desired signal from the undesired signal. Then, the pulse modulated signal is received by second detector and amplified by video amplifier and displayed

using cathode-ray tube (CRT). The simplest form of Cathode-ray tube is plan position indicator (PPI), which uses location of the target to map the polar co-ordinate in azimuth and range [2, 3, 4].Similarly other forms of display are A-scope which uses rectangular co-ordinates to display amplitude vs range and B-scope which display range vs angle. The most intriguing feature of RADAR is to uncover the range of a target in accordance with the time taken by radiated signal to the target and back to the RADAR with great accuracy and efficiency. Figure 2 shows the Intensity modulation & deflection modulation of target obtained from RADAR [1].

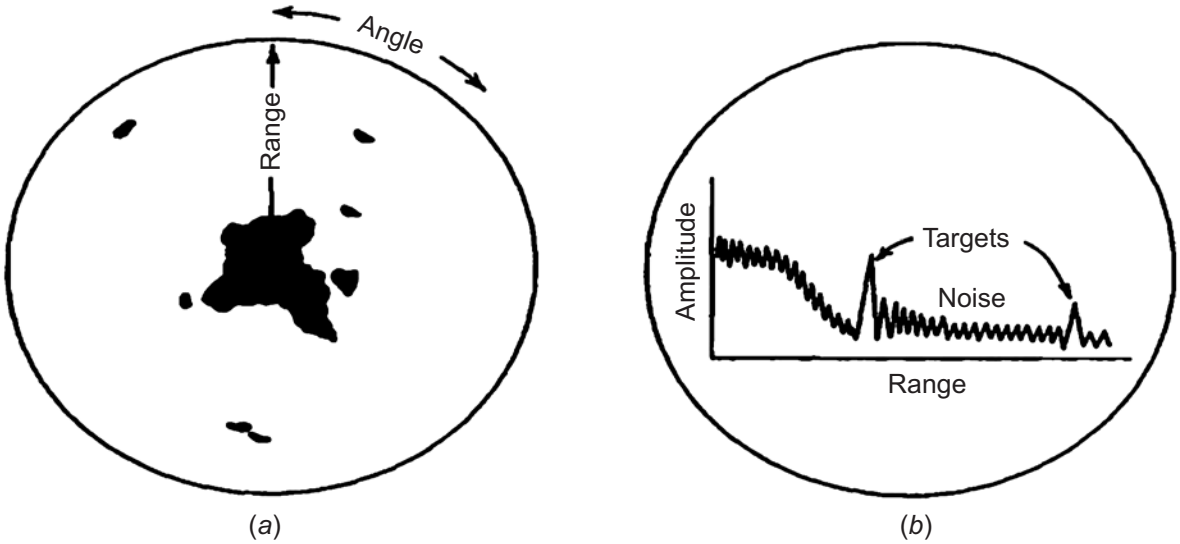

Figure 2: (*a*) intensity modulation from RADAR (*b*) deflection modulation from RADAR

The RADAR range equation is climacteric in determining theRADAR range. It also describes the RADAR characteristics and is very useful for designing RADAR system. The power Pr [1] returning to the RADAR receiving antenna is given by the equation 1.

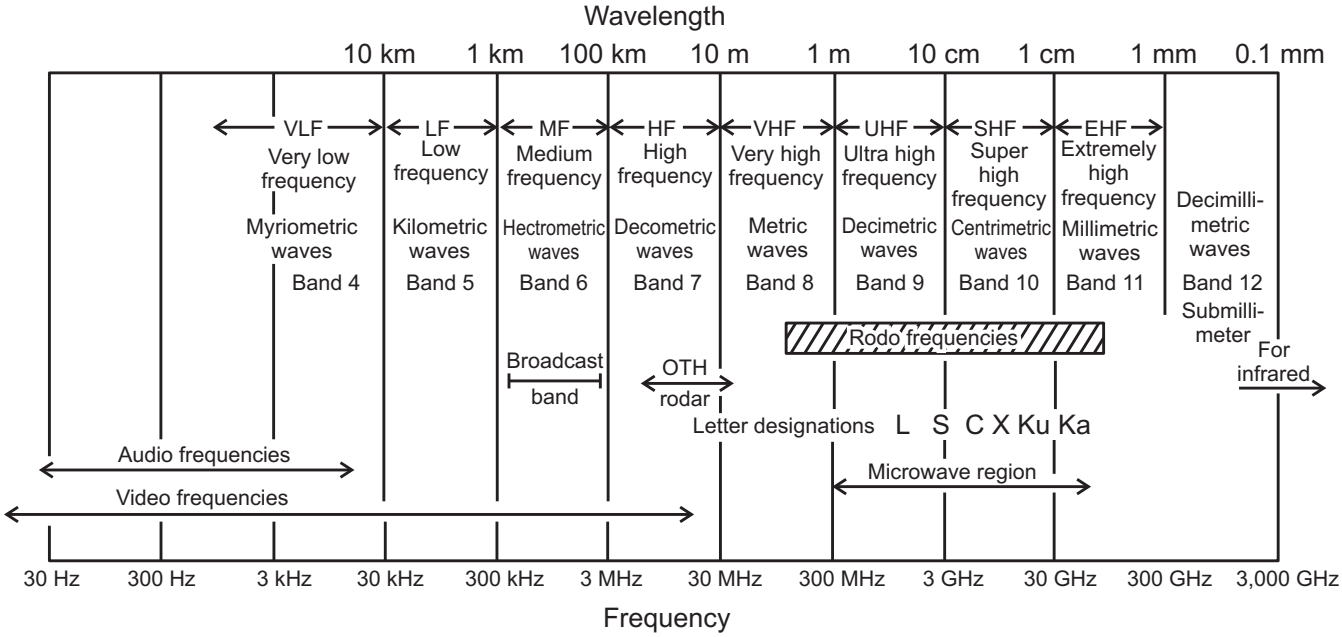

Figure 3: RADAR frequencies and electromagnetic spectrum

$$P_r = \frac{P_1 G_1 \sigma A_{er}}{(4\pi R^2)^2} = \frac{P_1 G_1 G_2 \sigma}{(4\pi)^3 R^4} \lambda^2 \quad (1)$$

Where, σ = RADAR cross section (m^2)

= wavelength of a RADAR signal

G_1 = transmission antenna gain
G_2 = reception antenna gain
P_t = transmission power (W)
P_r = reception power (W)
A_{er} = effective aperture area of receive antenna
R = Range of RADAR

Usually, the range of RADAR is measured in Nautical mile.1Nautical mile is equal to 1.852Km. In general, RADARs are operated in the range of frequencies extending from 220MHz to 35GHz. The electromagnetic spectrum representing the range of conventional RADAR[5] is shown in figure 3. Earlier, the letter codes such as S, C, L, X, etc. are used to profess the RADAR bands. The main purpose of these letter codes is military secrecy. The table 1 shows the RADAR frequency letter based nomenclature adopted by IEEE and their usage [5].

3. BASIC TYPES OF RADAR

There are basically two types of RADAR systems, namely:

(*a*) Primary RADAR : Another felicitous term used to describe Primary RADAR is Primary surveillance RADAR (PSR). The transmitter radiates signal in all the direction, of which has a minimum ratio proportion of energy signal gets reflected back from the target to the receiver. Several advantages of Primary RADAR are that it can operate independently of the target and does not require any co-operation by the target under surveillance. It is used by military purpose for detection of aircraft or ships. The disadvantages of Primary RADAR are; it needs high power to be radiated from the transmitter to ensure the return of signal from the target. Since, only minimum portion of signal get reflected back to the receiver, reflected signal may be disrupted by noise and signal attenuation from various factors. It cannot provide lot of information about the target, such as size and location with precise accuracy.

Table 1

Standard RADAR frequency nomenclature

Band Designation	*Frequency Range*	*Usage*
HF	3-30 MHz	OTH surveillance
VHF	30-300 MHz	Very-long-range surveillance
UHF	300-1,000 MHz	Very-long-range surveillance
L	1-2 GHz	Long-range surveillance En route traffic control
S	2-4 GHz	Moderate-range surveillance Terminal traffic control Long-range weather
C	4-8 GHz	Long-range Tracking Airborne weather detection
X	8-12 GHz	Short Range tracking Missile guidance Mapping, marine RADAR Airborne Intercept
K_a	12-18 GHz	High Resolution Mapping Satellite altimetry
K	18-24 GHz	Little use (water Vapour)
K_a	27-40 GHz	Very-High-Resolution Mapping Airport surveillance
Millimeter	40-100 + GHz	Experimental

(*b*) **Secondary RADAR** : Secondary RADAR is also known as SSR (Secondary Surveillance RADAR). This is alsocalled as Identification Friend or Identification Foe (IFF) system, means that it can identify between friendly targets from the enemy target. Its working operation is based on an active answering signal system. In addition to Primary RADAR, the SSR is also equipped with the device called transponder in the target. SecondaryRADAR radiates a signal which is received by a compatible transponder. After successful retrieving of the signal, the target sends the useful information in the form of code. This information tells the receiver about the location, altitude, status and many other useful information of the target. The advantages of SSR over PSR are; the received signal is much more powerful and is not attenuated by any factors. The base station can get proper information about the aircraft/ships. The disadvantages are that the base station cannot get information from the aircraft that does not have any operating transponder and from non-co-operative aircrafts. Hence, SSR is a dependent surveillance system.

4. CLASSIFICATION OF RADAR

There are many ways to classify RADAR. Based on functioning and major features, the RADAR can be classified as follows:

(*a*) **General Pulse RADAR :** This type of RADARradiates the repetitive seriesof short duration rectangular pulses. There are two types of pulse RADARs. They are RADAR with Moving Target Indication (MTI) andRADAR with Pulse Doppler. Both uses Doppler frequency shift that deals with received signal to locate the target with moving motion. Example: Long range air surveillance RADAR, weather RADAR, test range RADAR**,** etc.

- **Moving Target Indication (MRI)RADAR:** This type of RADAR can differentiate the reflected signals coming from the moving target & the stationary target and clutter by observing Doppler shift in frequencies. It uses low pulse repetition frequency (PRF) to detect the moving target in the clutter. Example: Ground based aircraft search and surveillance RADAR systems.
- **Pulse Doppler RADAR:** This type of RADAR is similar to MRI RADAR. The only difference is that it uses high or medium PRF to detect the moving target in the clutter. It is used byarmy,navyand air force.

(*b*) **Maximum Range Resolution RADAR:** This type of RADAR uses short pulses in order to obtain high resolution in the range, angle and doppler velocity co-ordinates. Stationary intruder in the clutter can be detected using maximum range resolution. This type of RADAR is mostly used by air force, navy and military.

(*c*) **Pulse Compression RADAR:** This type of RADAR is similar to high range resolution RADAR which uses long pulse to get the resolution of a short pulse with the energy of along pulse. It uses frequency or phase modulation of high energy long pulse to obtain the required resolution.

(*d*) **CWRADAR :** CWstands for continuous wave. It professes transmission and reception of continuous sine wave at the same time. It employs Doppler frequency shift for detecting moving targets. It is mostly used in vehicle speed detection [6]. Figure 4 shows a basic Continuous RADAR [7].

(*e*) **FM-CWRADAR :** FM-CW stands for Frequency modulated continuous wave.This is a special type of CW RADAR which uses frequency modulation to determine the range of the target. The most common type of FM-CW RADAR is RADAR altimeter used in airplanes and satellite to measure the altitude above the earth's surface.

(*f*) **Synthetic Aperture RADAR (SAR) :** It is a coherent imaging RADAR which is deployed in aircrafts and satellite to get a high resolution RADARimage of a scene. It uses pulse compression and primarily used by air force, navy, army and NASA.

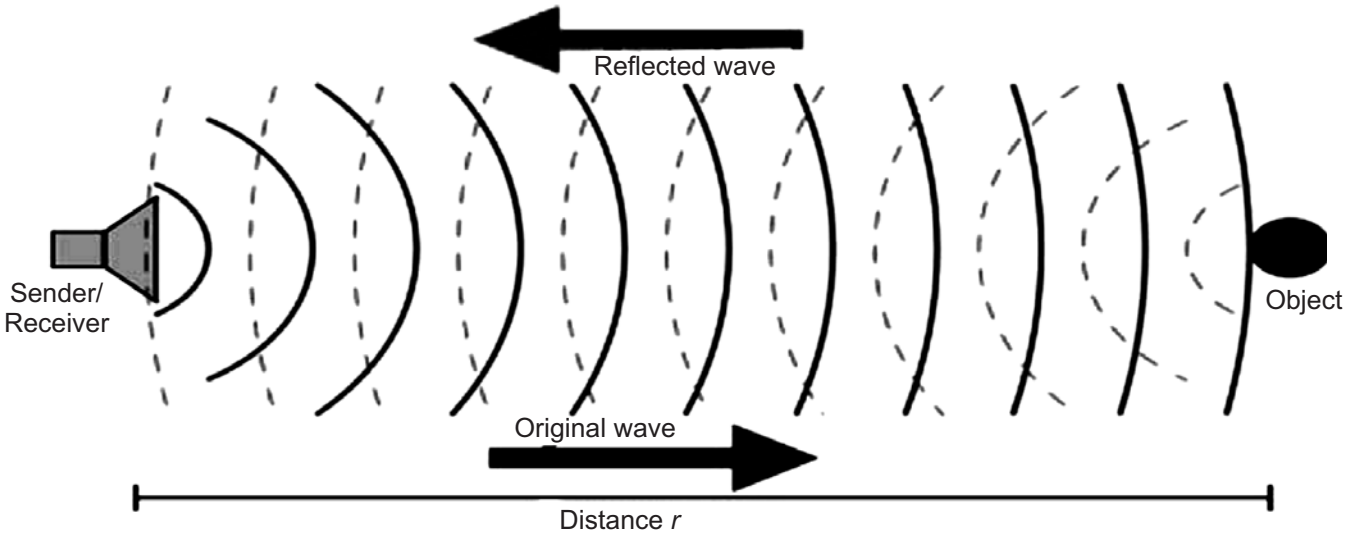

Figure 4: Continuous wave RADAR

(*g*) **Inverse Synthetic Aperture RADAR (ISAR) :** ISAR is similar to that of SAR that uses high resolution in range and Doppler frequency shift to obtain the cross range resolution. It can be used to detect moving or stationary targets. It is primarily used by Air Force and NASA.

(*h*) **Tracking RADAR :** Tracking RADAR follows the trajectory of the target and predicts its future positions. It continuously tracks the location of the target following its angle and range information. The types of tracking RADARs are namely: Single Target Tracker (STT), Automatic Detection and Tracking (ADT), Track while scan (TWS) and Phased array Tracker(PAT).

(*i*) **Weather (meteorological) Observation RADAR :** This type of RADAR measures the precipitation rate, wind speedand other weather conditions and plays very important role in meteorology studies.

(*j*) **Imaging RADAR:** This RADAR creates the 2-D image of the target. It is usually deployed in satellites. RISAT (RADAR Imaging Satellite) is a series of Indian RADAR imaging reconnaissance [8] satellites built by ISRO. They provide all-weather surveillance using synthetic aperture RADARs (SAR).

(*k*) **Military RADAR :** Military RADAR system can be classified as: land based, airborne and ship borne RADAR.

- **Land-Based Air Defense RADAR:** This type of RADAR includes all the stationary and mobile RADAR systems used in air defense.
- **Missile Control RADAR:** This includes tracking, fire-control and weapons locating RADAR systems.
- **Naval and Coastal Surveillance and Navigation RADAR:** This is a ship borne RADAR used for surface and air tracking and surveillance.
- **Airborne Surveillance RADAR:** These are designed for early warning and tracking of remotely piloted vehicles (RPV).
- **Airborne Fire-Control RADAR:** This RADAR system is used for weapon fire control and weapon guidance system.

5. APPLICATIONS OF RADAR

(*a*) **Air Traffic Control (ATC):** RADARs are used for safety controlling of the air traffic. It is used in the vicinity of airports for guiding airplanes for proper landing in adverse weather conditions. Usually, high resolution RADARis employed for this purpose. RADARs are used with ground control approach (GCA) system for safe aircraft landing.

(*b*) **Aircraft Navigation :** The weather avoidance RADARs and ground mapping RADARs are employed in aircrafts to navigate it properly in all the conditions. Radio altimeter and Doppler navigator are also a form of RADAR. These RADARs provide safety to aircraft from potential collision with other aircraft and objects.

(*c*) **Ship Navigation and Safety :** High resolution Shore based RADARs are used for beaconing and as an aid of navigation. During poor visibility due to bad weather conditions, the RADAR provides safe travel by warning potential threats. They are also used to find the depth of sea.

(*d*) **Space:** RADARs are used for docking and safely landing of spacecrafts. Satellite borne RADARs are also used for remote sensing. Ground based RADARs are used to track and detect the satellites and spacecraft.

(*e*) **Remote sensing and Environment:** They are employed in remote sensing for detecting weather (meteorological) conditions of the atmosphere and tracking of planetary conditions.

(*f*) **Law Enforcements :** Highway police force widely uses RADARs to measure the vehicle speed for safety regulations.

(*g*) **Military area:** RADARs have got wide application in military operations. They are used in air, naval and ground for defense purposes. They are also used for tracking, surveillance and detection of the target. Weapon control, Fire control and missile guidance is usually employed with various types of RADARs [6]. Long range RADAR is very useful for many purposes. It is generally used to track space objects. Furthermore, it is also used for ballistic missiles. Figure 5 shows a Multipurpose RADAR system antenna that could serve variety of purposes such as broadcasting, detection, etc.



Figure 5: Multipurpose RADAR Antenna

(*h*) **Global Ozone Monitoring Experiment (GOME) Applications:** Atmospheric available ozone and No2 global monitoring have been going on after the invention of GOME Products (july 1996). GOME products Can be used for retrieving other trace gases relevant to the ozone chemistry as well as other atmospheric constituents. Furthermore, it can be used for climatic variable clouds, solar index and aerosols. All these are crucial for assessing climate change.

(*i*) **Microwave Sounder (MWR) Applications :** In order to monitor the Antarctic ice cycle ERS-2 microwave sounder is being used. Mapping the radiometric properties of the ice-shelf, gives an important input for the understanding of the dynamics, decay and growth of ice sheets. This this is considered to be basic to the understanding of environmental and climatic changes.

(*j*) **Wind Scatterometer (WSC) Applications:** Wind scatterometers are used for accurate measurements of the radar backscatter from the ocean surface when illuminated by a microwave signal with a narrow spectral bandwidth to derive information on ocean surface wind velocity. The amount of backscatter depends on two factors.. Dependent on wind stress which results in wind speed at the surface, and wind direction are the two types of factors.

(*k*) **Land use, Forestry and Agriculture :** Observing the land surface is being considered as an experimental application for ERS-1 data in the original mission targets. Major potential application area for ERS data are being offered by the the ability to monitor crop development and forestry changes independent of weather conditions.

(*l*) **Other Applications :** Ground penetrating RADARs are widely used by geologist for studying the position of the earth for Earthquake detection. Scientists use RADAR for better study of movements of animals,birds and insects. Archeologists use it for detecting buried artifacts. Many industries and factories use it for safety purposes. During world war-2, Signal corps Radio-270 or Pearl Harbor RADAR was used by US army's as long-distance RADAR. It plays significant role in detecting the incoming raid, just before half an hour the attack has commenced and is most useful [6].RADAR waves blaze an ample path for the rescue teams to search the needy people during the earthquake [5] that detect the heartbeats through the finder search options of survivors trapped in collapsed and damaged buildings after Nepal Earthquake of lately [9].Figure. 6show the use of RADAR by rescue team during Nepal Earthquake onApril 25 2015.

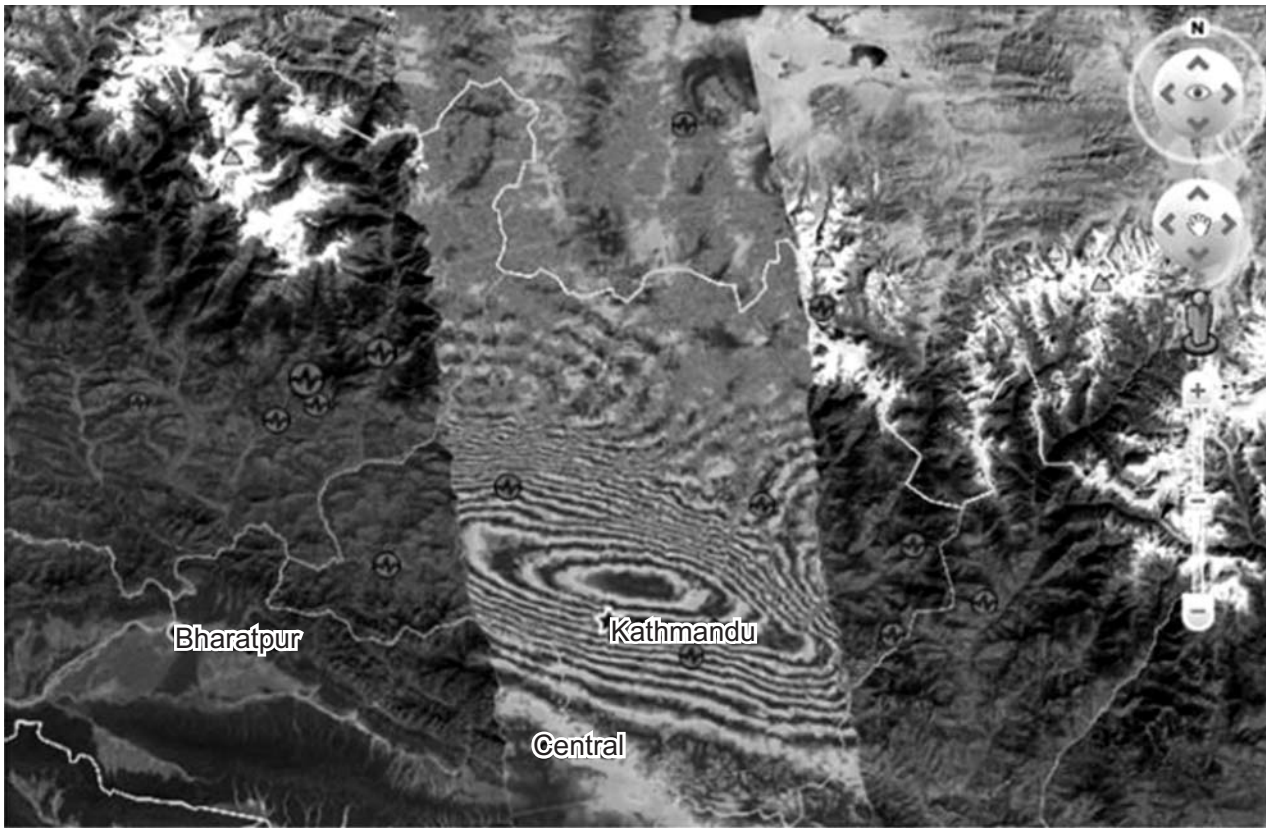

Figure 6: Use of RADAR by Rescue team during Nepal Earthquake on April 25 2015

Furthermore, if we consider floods which is the result of Bad weather therefore dense cloud , and thus optical sensors cannot be used for monitoring purposes. Radar satellites, however, can penetrate the cloud cover with their microwaves, and thus deliver valuable information for future planning and prevention.

6. CONCLUSION

It has been made known that there is a variety of applications for RADAR products. Additionally, ongoing research and development is constantly increasing the existing range of applications. One of the most important characteristics of RADARs is their capability to penetrate cloud cover and to obtain data either by day or by night. It is this all-weather capability that has contributed extensively to the various commercial applications of RADAR.

7. REFERENCES

1. M. I. Skolnik, Introduction to RADAR Systems, New York: McGraw-Hill,2001.
2. Vilas s bagad,et al, Microwave and RADAR Engineering, 2008.
3. F. E. Nathanson, RADAR Design Principles, New York: McGraw-Hill, 1991.
4. Louis N. Ridenour. Radar System Engineering, volume 1 of MIT Radiation Laboratory Series. McGraw-Hill, New York, 1947.
5. Panel on Frequency Allocations and Spectrum Protection for Scientific Uses, Handbook of Frequency Allocations and Spectrum Protection for Scientific Uses, Washington, The National academic press, 2nd edition, 2015.
6. https://en.wikipedia.org/wiki/RADAR.
7. David Jenn, "Plasma Antennas: Survey of Techniques and Current State of the Art," NPS Technical Report NPS-CRC-03-01, September 2003.
8. A. S. Kiran Kumar, "Significance of RISAT-1 in ISRO's Earth Observation Programme" Current Science, Vol. 104, No. 4, 25 February 2013.
9. http://www.digitaltrends.com/computin-g/new-satellite-images-shed-light-on-the-7-8-magnitude-nepal-earthquake/.